## How to replace the toner cartridge

**WARNING**

Just after you use the MFC, some internal parts of the machine will be extremely **HOT!** So, never touch the shaded parts shown in the illustration.

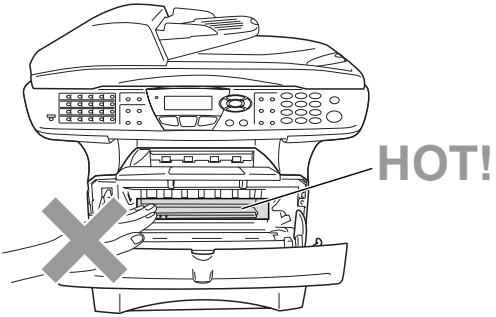


**1** Open the front cover and pull out the drum unit.

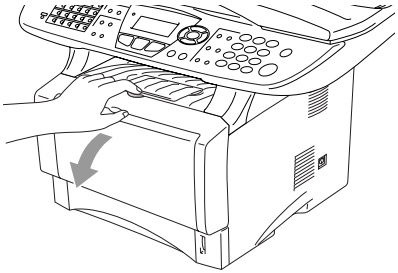

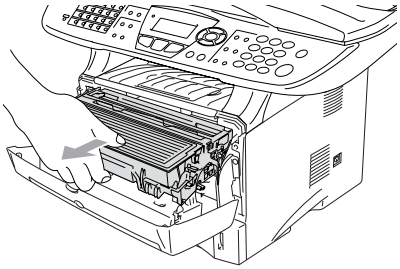

**Caution**

- Place the drum unit on a drop cloth or large piece of disposable paper to avoid spilling and scattering the toner.
- To prevent damage to the MFC from static electricity, do not touch the electrodes shown below.

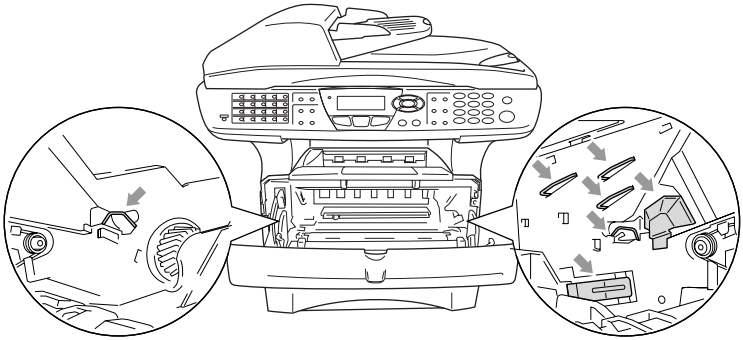

**2** Hold down the lock lever on the right and pull the toner cartridge out of the drum unit.

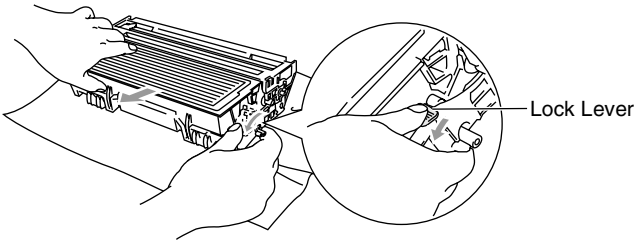


**Caution**

Handle the toner cartridge carefully. If toner scatters on your hands or clothes, immediately wipe it off or wash it with cold water.

**3** Unpack the new toner cartridge. Place the used toner cartridge into the aluminum bag and discard it according to local regulations.

**Caution**

- Wait to unpack the toner cartridge until immediately before you install it in the MFC. If a toner cartridge is left unpacked for a long period of time, the toner life is shortened.
- Brother strongly recommends that you do not refill the toner cartridge provided with your MFC. We also strongly recommend that you continue to use only Genuine Brother Brand replacement toner cartridges (**TN-540** or **TN-570**). Using or attempting to use potentially incompatible toner and/or toner cartridges in your MFC may cause damage to the machine itself and/or it may result in unsatisfactory print quality. Our warranty coverage does not apply to any problem that was caused by the use of unauthorized third party toner and toner cartridges. To protect your investment and guarantee your print quality please continue to replace consumed toner cartridges with only Genuine Brother Branded Supplies.

**4** Gently rock the toner cartridge from side to side five or six times to distribute the toner evenly inside the cartridge.

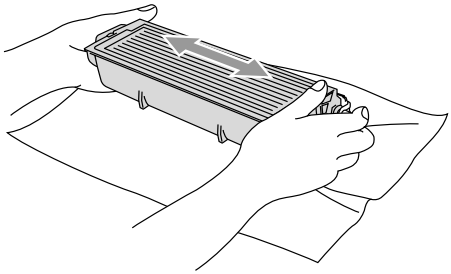

**5** Remove the protective cover.

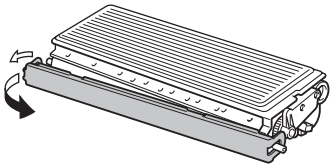

**6** Insert the new toner cartridge in the drum unit until it clicks into place. If you put it in properly, the lock lever will lift automatically.

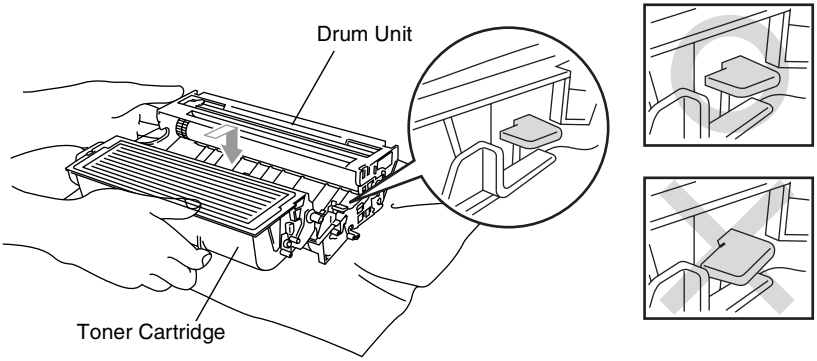


**7** Clean the primary corona wire inside the drum unit by gently sliding the blue tab from right to left several times. Return the blue tab to the Home position (▼) before reinstalling the drum unit and toner cartridge assembly.

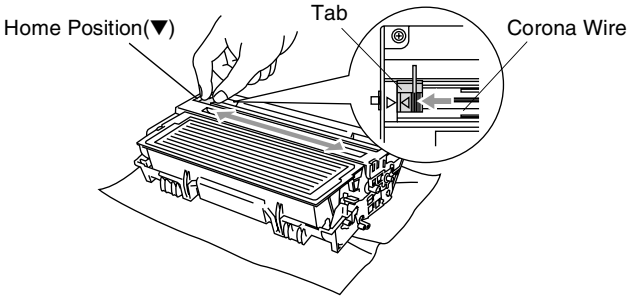
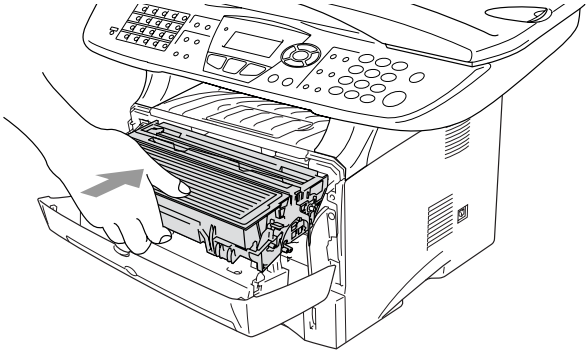
**8** Reinstall the drum unit and toner cartridge assembly and close the front cover.